ELPAC powered by MEGATRON

Series ELBLM

Dimensions in inch (mm)

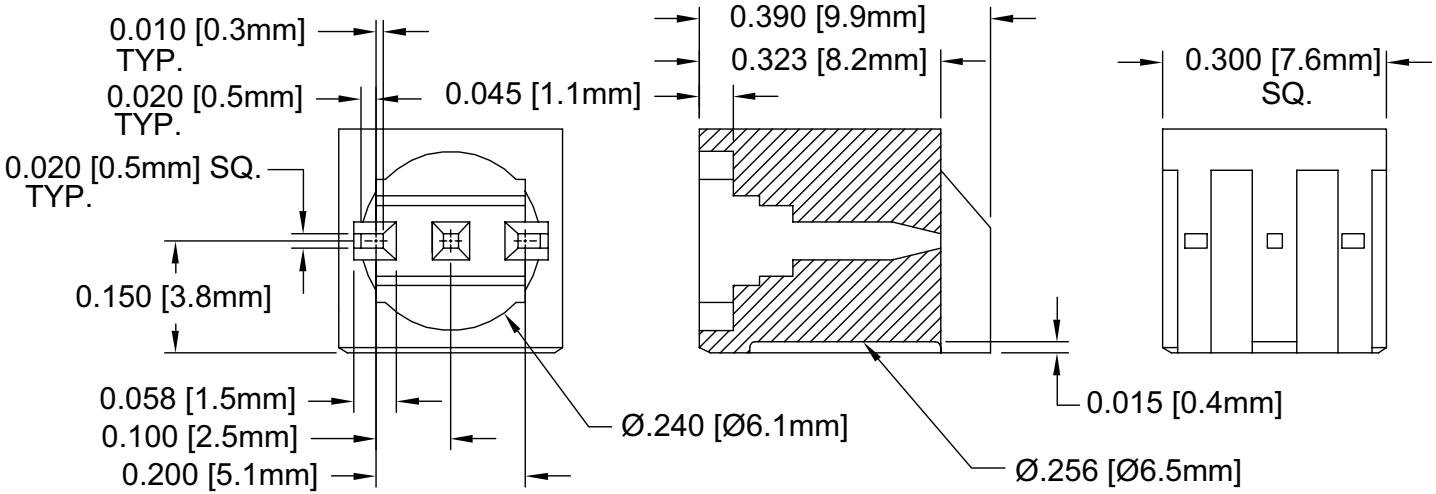

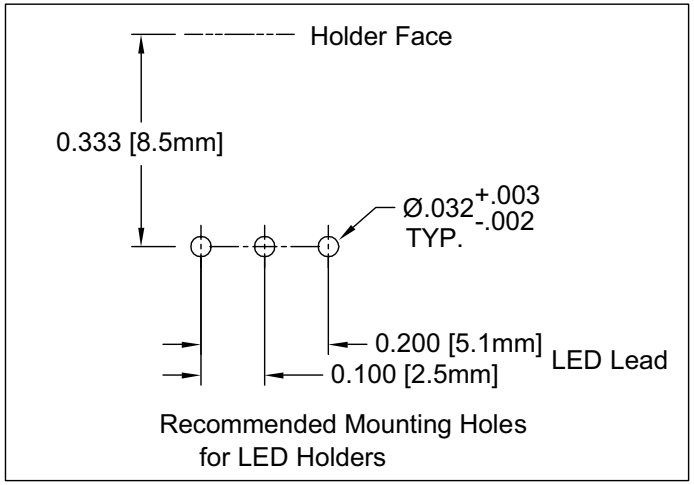

Specifications are subject to change without notice