ELPAC powered by MEGATRON

Series EL91F

Dimensions in inch (mm)

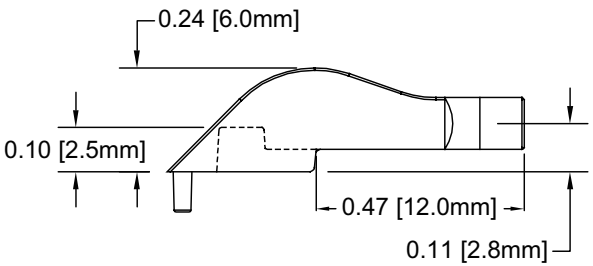

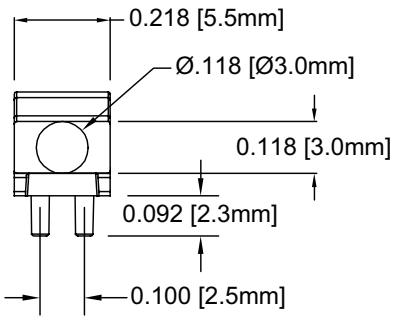

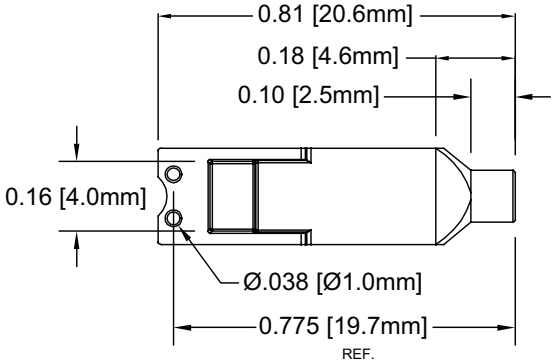

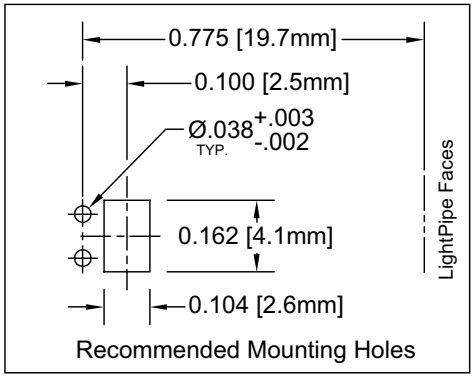

Recommended Mounting Holes

MEGATRON Elektronik GmbH & Co. KG ▪ Hermann-Oberth-Strasse 7 ▪ 85640 Putzbrunn / Munich
Tel.: +49 89 46094-0 ▪ www.megatron.de ▪ info@megatron.de

Specifications are subject to change without notice