ELPAC powered by MEGATRON

Series EL90F

Dimensions in inch (mm)

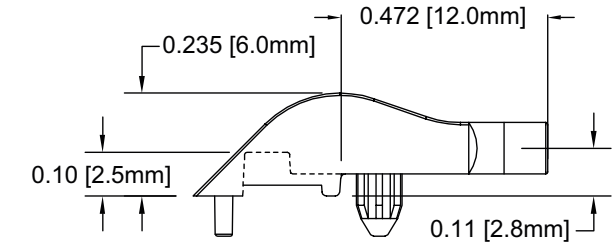

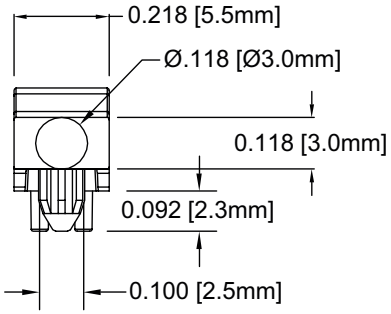

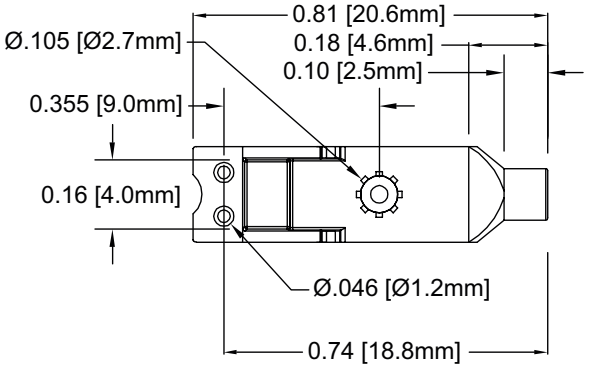

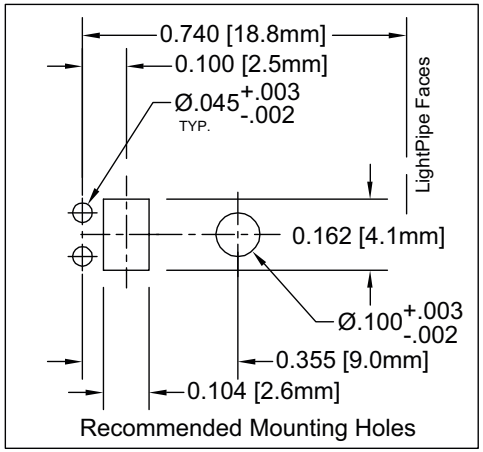

Specifications are subject to change without notice